Cryostar

Cryogenic cooling

The cryostar is a vaccum chamber with a cold head that makes the crystal evacuates quicker the heat of the pump.

All *Cryostar* models include :

- One mechanical structure
- One cryogenic cooler with compressor
- Pumps for high vacuum (down to10 $^{-5}$)
- One driving unit with safety loop (vacuum level and crystal temperature)

The height of the laser beam versus table is 50 mm min. Input aperture is larger than 15 mm diameter, and the angular acceptance for the propagation of beams in multi-pass configuration is bigger than 0,2 rd.

The driving unit checks vacuum quality and crystal temperature. The temperature is controlled by an internal regulation (temperature stays at the same value even when pumping level changes).

The length between the mechanical bloc (crystal) and the compressor itself is 4 meters max.

Cryostar interests and results

A confusion can be made sometimes when one opposes the techniques between water cooling and cryogenic cooling.

In fact, both techniques are usable for cooling a crystal, they can efficiently dissipate the power caused by the green light pumping. The choice of cryogenic cooling must not be made because it could be a more efficient cooling technique but because this technique is the only one for keeping a very good 800 nm beam quality when very high pumping power (high stress) is applied in the crystal. Basically, the stress brought to the crystal with high average power is so that it implies a thermal lens by modifying the structure of the crystal.

It is proved that the focal length of the thermal lens in the crystal depends on the temperature of itself. This is why we need to maintain the crystal in a cold head that allows a fastest extraction of the heat.

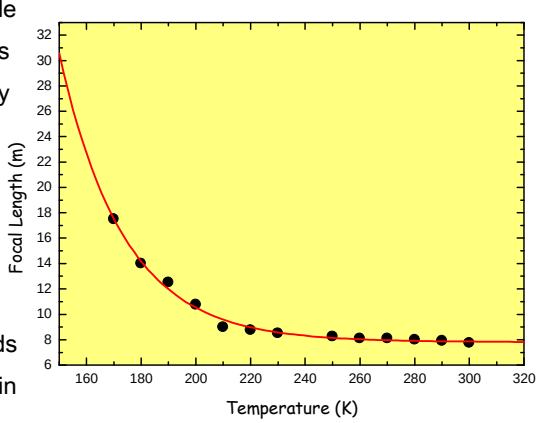

Thermal focal length versus temperature

EUROPE OFFICES
91029 EVRY
France
+33 1 69 11 27 90

WEBSITE
WWW.AMPLITUDE-TECHNOLOGIES.COM

To illustrate these words, let's see what occurs when the pumping power increases on the beam profile.

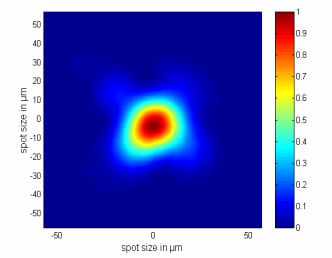

40 W pumping

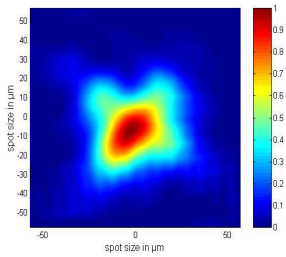

80 W pumping

As you can see on the last pictures, the beam is very deteriorated when the pump power increases. If the beam is no more Gaussian, then any user will encounter troubles to focalize the beam on a very tiny surface.

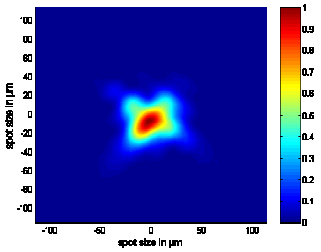

Water cooling

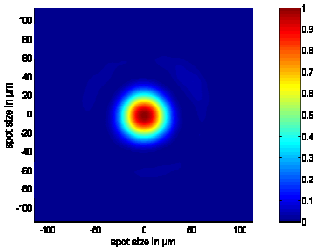

Cryogenic cooling

You can observe on a laser beam that with a cryogenic cooling, the output beam profile nearly reaches a TEM00.

To conclude we can say that this option is adapted to the power amplifier since the pump power is higher than 20W. Consequently, the M² parameter is always close to 1.

Cryostar opto/mechanical set-up

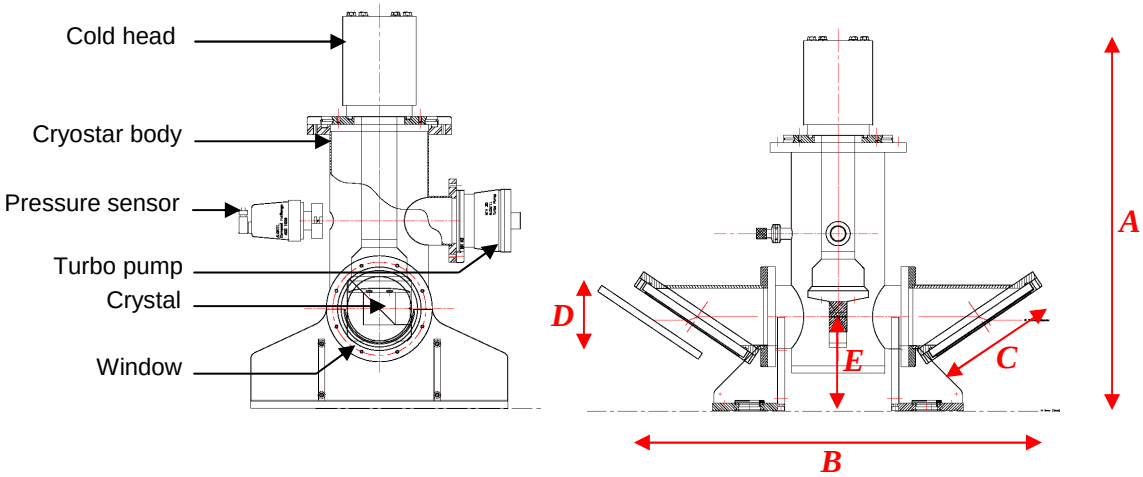

For 150W extraction

Electricity: 3 phases, 50/60 Hz, 20 Amp per phase max.
Tap water: 5 -6 liters/mn max.

Filters must be replaced every 3000 hours.

Optical dimensions				
	Crystal Dimensions	***Power dissipated @ 50 Hz***	***Power dissipated @ 60 Hz***	***Full Aperture angle***
CRY-110	6x6 mm	20 W	26 W	12,6°
CRY-310	6x6 mm	50 W	66 W	12,6°
CRY-320	16x16 mm	50 W	66 W	11,4°
CRY-330	22x22 mm	50 W	66 W	10,4°
CRY-560	50x50 mm	150 W	200 W	11°

Mechanical dimensions					
	A	***B***	***C***	***D***	***E***
CRY-110	450 mm	340 mm	75 mm	36 mm	50 mm
CRY-310	450 mm	340 mm	75 mm	36 mm	50 mm
CRY-320	450 mm	340 mm	100 mm	48 mm	50 mm
CRY-330	450 mm	340 mm	100 mm	48 mm	50 mm
CRY-560	620 mm	675 mm	200 mm	104 mm	150 mm

EUROPE OFFICES
91029 EVRY
France
+33 1 69 11 27 90

WEBSITE
WWW.AMPLITUDE-TECHNOLOGIES.COM